Systec MP-90

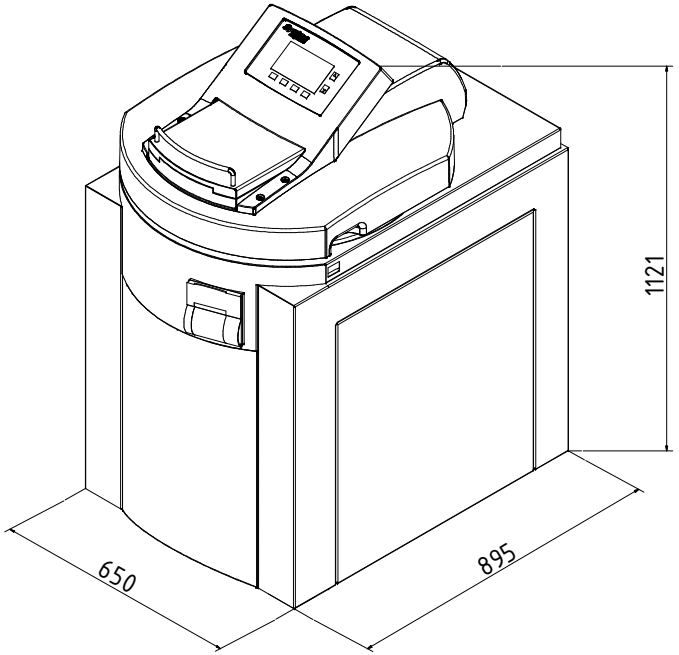

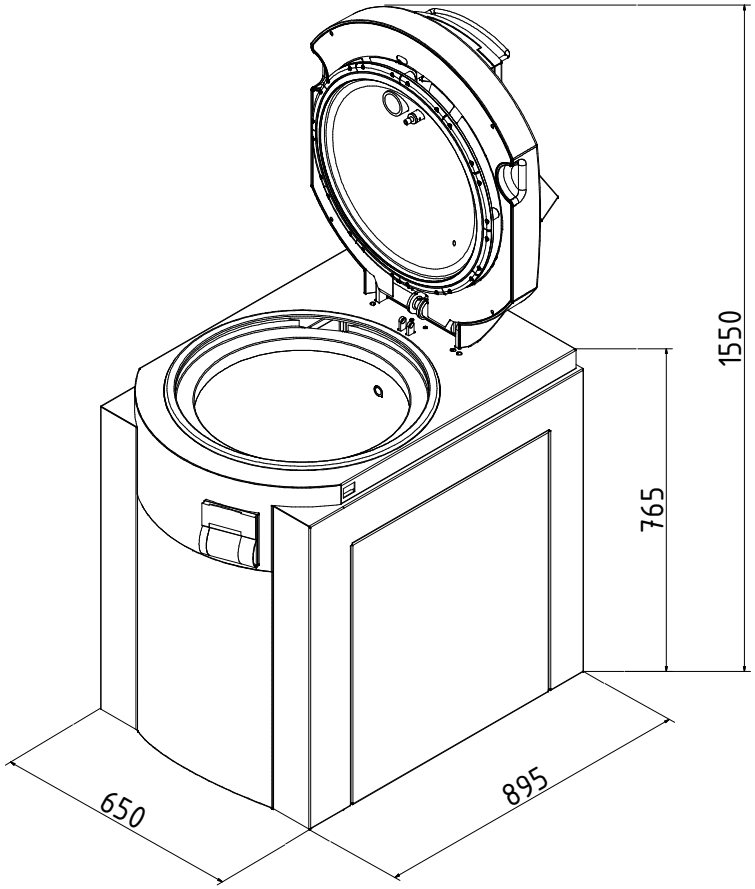

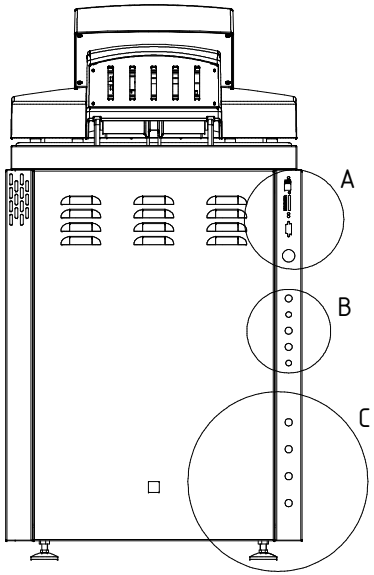

A

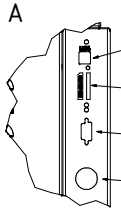

(1) USB-Port

(2) SD-Card

(3) Interface RS 232

(4) Power supply
380-400V *

B

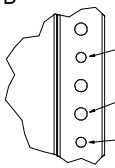

(5) Fuse vacuum-pump

(6) Fuse circulation-pump

(7) Cut-off

C

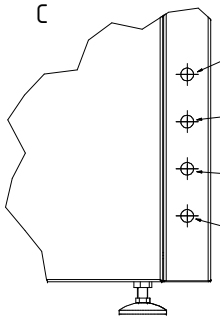

(8) Compressed air

(9) Demineralized water
(fast locking coupling)

(10) Cooling water
(fast locking coupling)

(11) Drain
(fast locking coupling)

* Modified power supplies available on request

					Allgemein-Toleranz ISO 2768 T1-m	Oberfläche	Maßstab:	Gewicht:
							Werkstoff:	
				Datum	Name			
			Gezeichnet	05.07.2016	mustake			
			Geprüft					
			Norm					
					Systec the autoclave company		Systec MP-90 en	1
0	Original							A0
Status	Änderungen	Datum	Name				Artikel:	