Systec MP-65

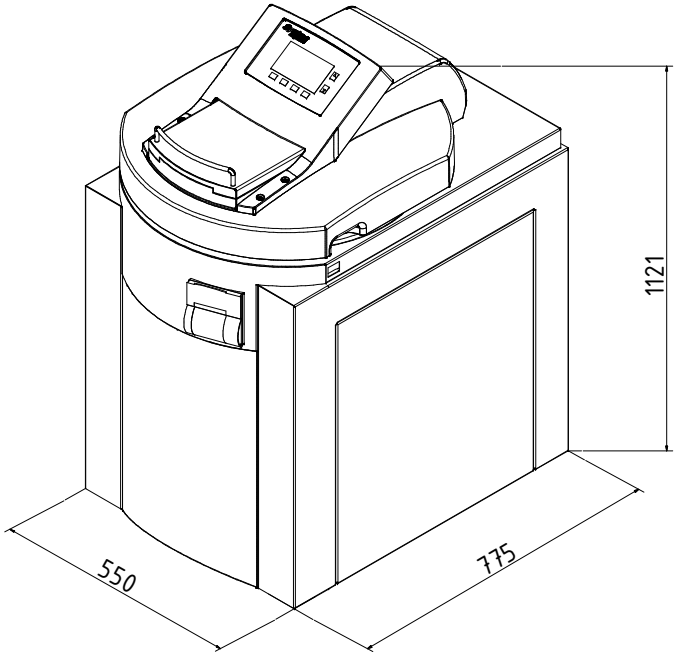

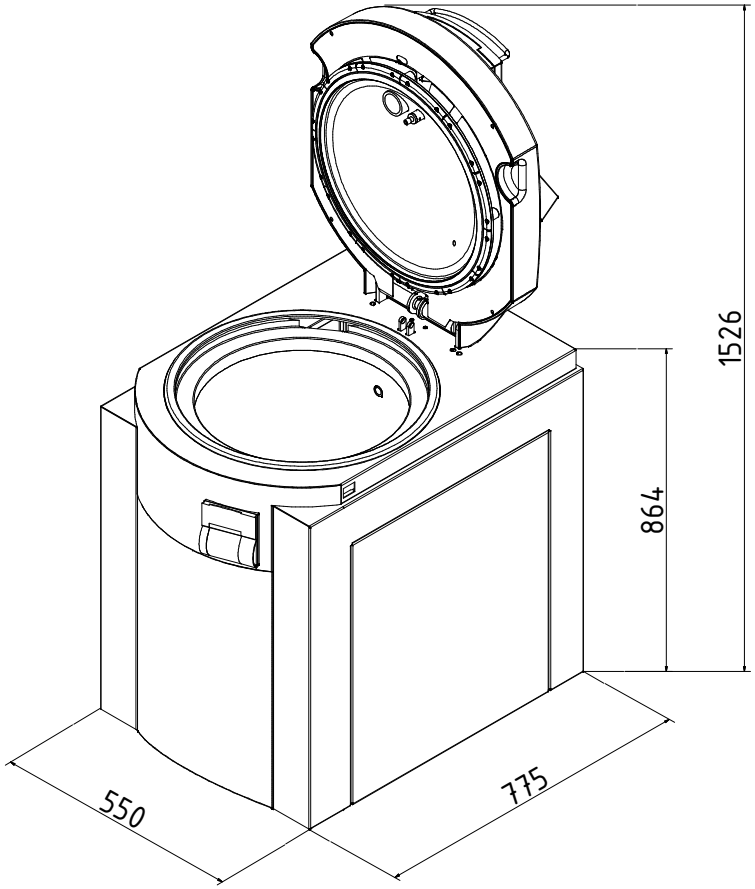

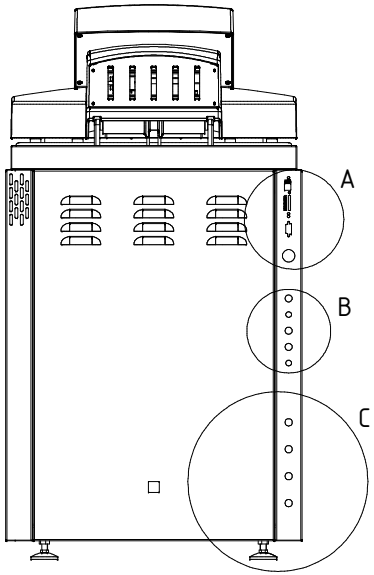

A

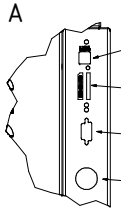

(1) USB-Port

(2) SD-Card

(3) Interface RS 232

(4) Power supply
380 - 400V *

B

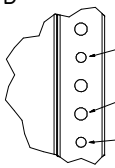

(5) Fuse vacuum-pump

(6) Fuse circulation-pump

(7) Cut-Off

C

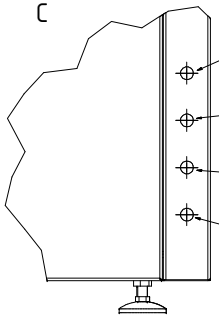

(8) Compressed air

(9) Demineralized water
(fast locking coupling)

(10) Cooling water
(fast locking coupling)

(11) Drain
(fast locking coupling)

* Modified power supplies available on request

					Allgemein-Toleranz ISO 2768 T1-m	Oberfläche	Maßstab:	Gewicht:	
							Werkstoff:		
					Datum	Name			
				Gezeichnet	05.07.2016	mustake			
				Geprüft					
				Norm					
					Systec the autoclave company		Systec MP-65 en		1
0	Original								A0
Status	Änderungen	Datum	Name				Artikel:		