Systec V-95

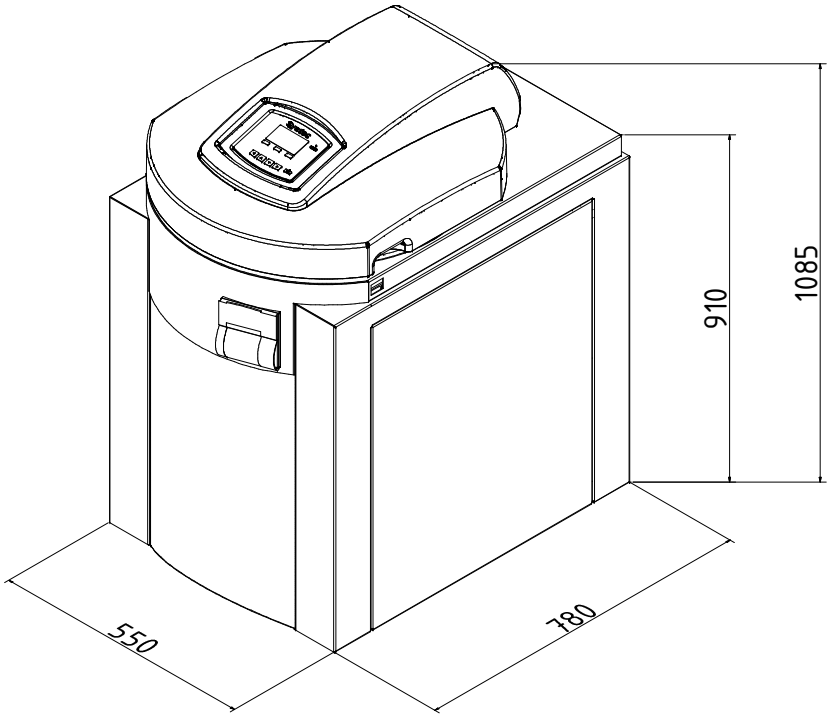

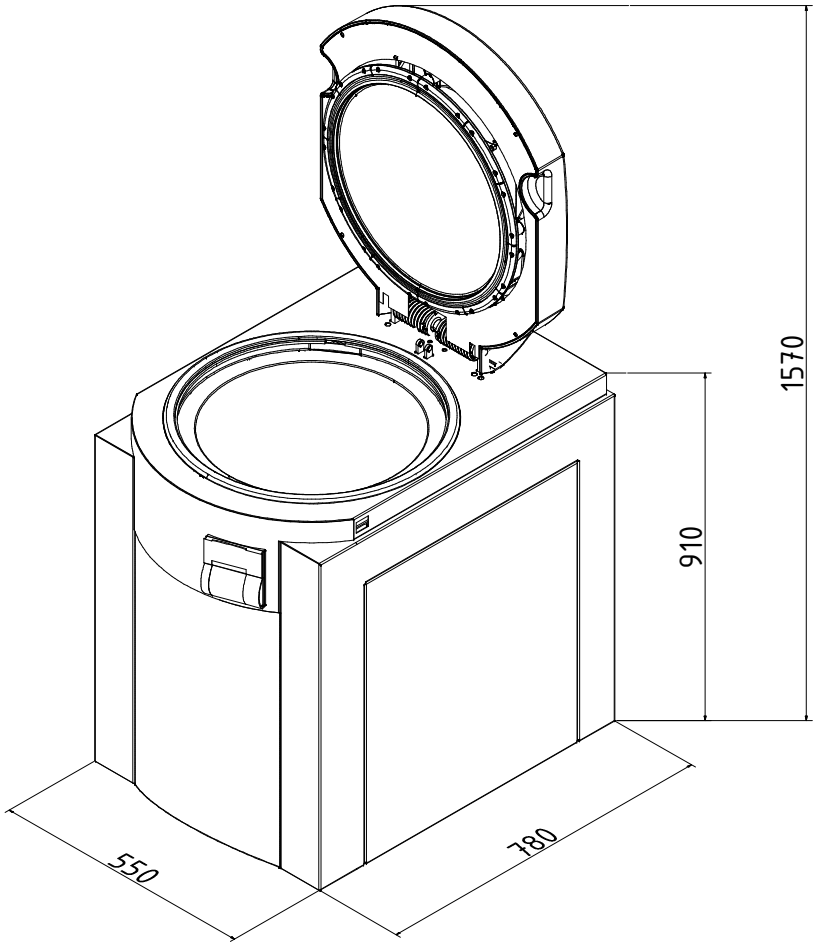

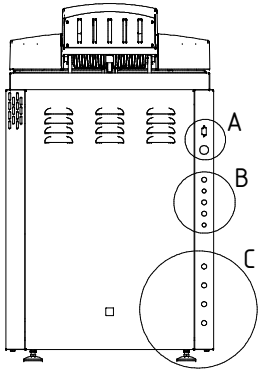

A

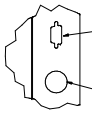

(1) Interface RS 232

(2) Power supply

B

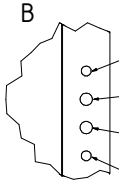

(3) Fuse vacuum-pump

(4) Fuse compressor

(5) Fuse water-pump

(6) Cut-Off

C

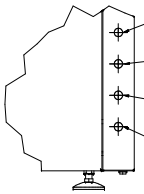

(7) Compressed air

(8) Demineralized water 3/4"

(9) Cooling water 3/4"

(10) Drain 3/4"

Legend

No.	Systec VX	Systec VE	Systec VB	Remarks
1	X	X	-	
2	380 - 400 V			Modified power supplies available on request
3	X	X	X	Vacuum pump
4	X	X	X	
5	X	X	-	
6	X	X	X	
7	O	O	-	Only in conjunction with optional water cooling system
8	X	X	-	
9	X	X	-	
10	X	X	X	

X = Standard ; O = Optional ; - not available

				Allgemein-Toleranz ISO 2768 T1-m	Oberfläche	Maßstab:		Gewicht:	
						Werkstoff:			
				Datum	Name				
				Gezeichnet 23.06.2010	mustake				
				Geprüft					
				Norm					
				Systec the autoclave company		Systec V95en			1
0	Original								A0
Status	Änderungen	Datum	Name			Artikel:			