# Systec V-55

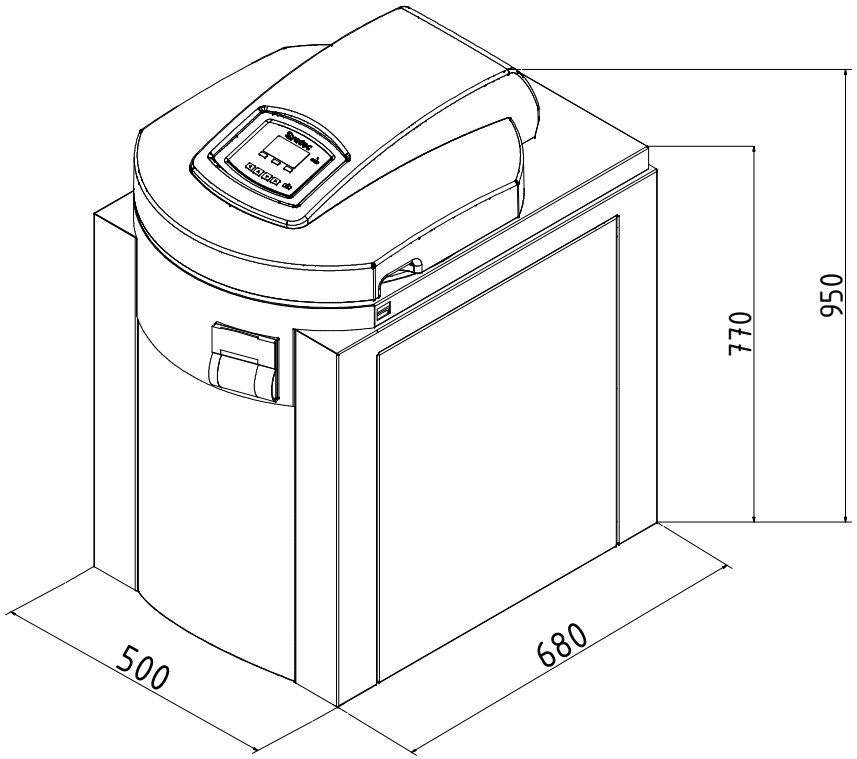


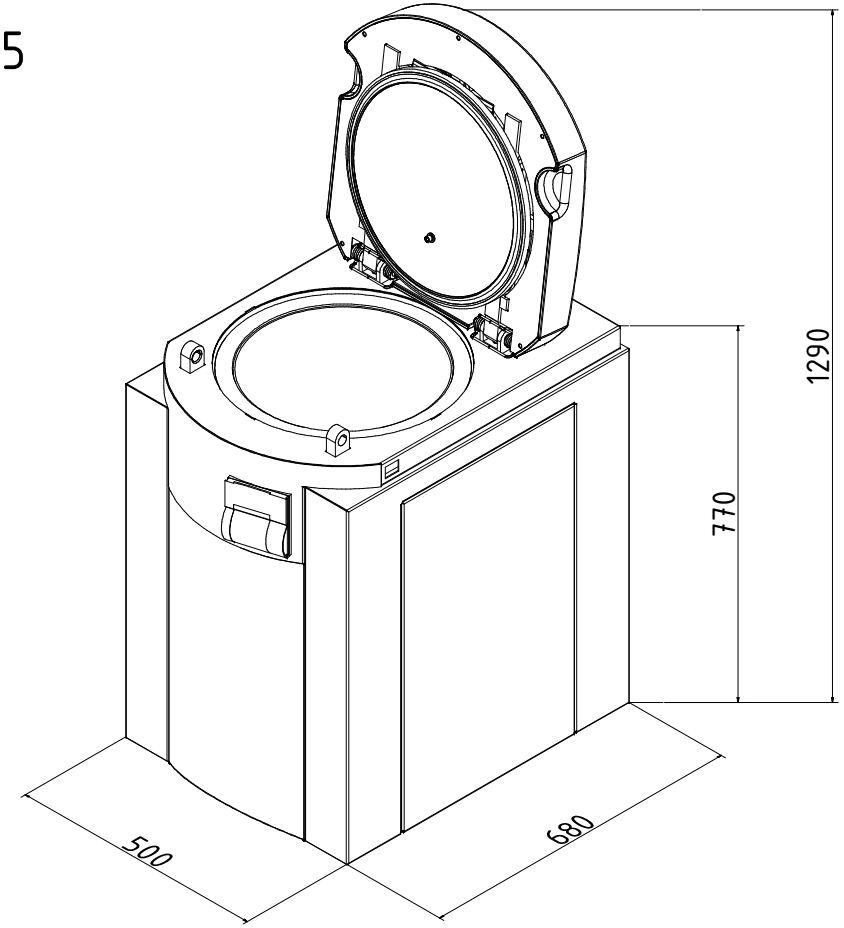


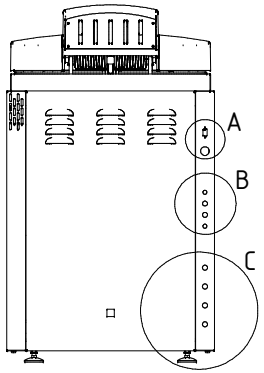


A

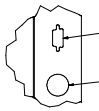

(1) Interface RS 232

(2) Power supply

B

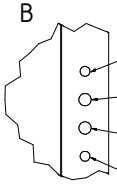

(3) Fuse vacuum-pump

(4) Fuse compressor

(5) Fuse water-pump

(6) Cut-Off

C

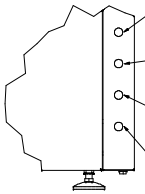

(7) Compressed air

(8) Demineralized water 3/4"

(9) Cooling water 3/4"

(10) Drain 3/4"

Legend

| Nr. | Systec VX | Systec VE | Systec VB | Remarks |
|---|---|---|---|---|
| 1 | X | X | - | |
| 2 | 220 - 230 V | | | Modified power supplies available on request |
| 3 | O | O | - | Only in conjunction with optional vacuum system |
| 4 | X | X | X | |
| 5 | X | X | - | |
| 6 | X | X | X | |
| 7 | O | O | - | Only in conjunction with optional water cooling system |
| 8 | X | O | - | |
| 9 | X | X | - | |
| 10 | X | X | X | |

X = Standard ; O = Optional ; - = not available

| | | | | | | | |
|---|---|---|---|---|---|---|---|
| | | | | Allgemein-Toleranz ISO 2768 T1-m | Oberfläche | Maßstab: | Gewicht: |
| | | | | | | Werkstoff: | |
| | | | | Datum | Name | | |
| | | | | Gezeichnet 23.06.2010 | mzitzke | | |
| | | | | Geprüft | | | |
| | | | | Norm | | | |
| 0 | Original | | | Systec the autoclave company | | Systec V55en | 1 |
| Datum | Änderungen | Datum | Name | | | Artikel: | A0 |